## SO-E-06

**Standard:** UL498 5-15R
**Rating:** 15A 125V AC
**Approvals:** UL / CSA

**Dimensions:**

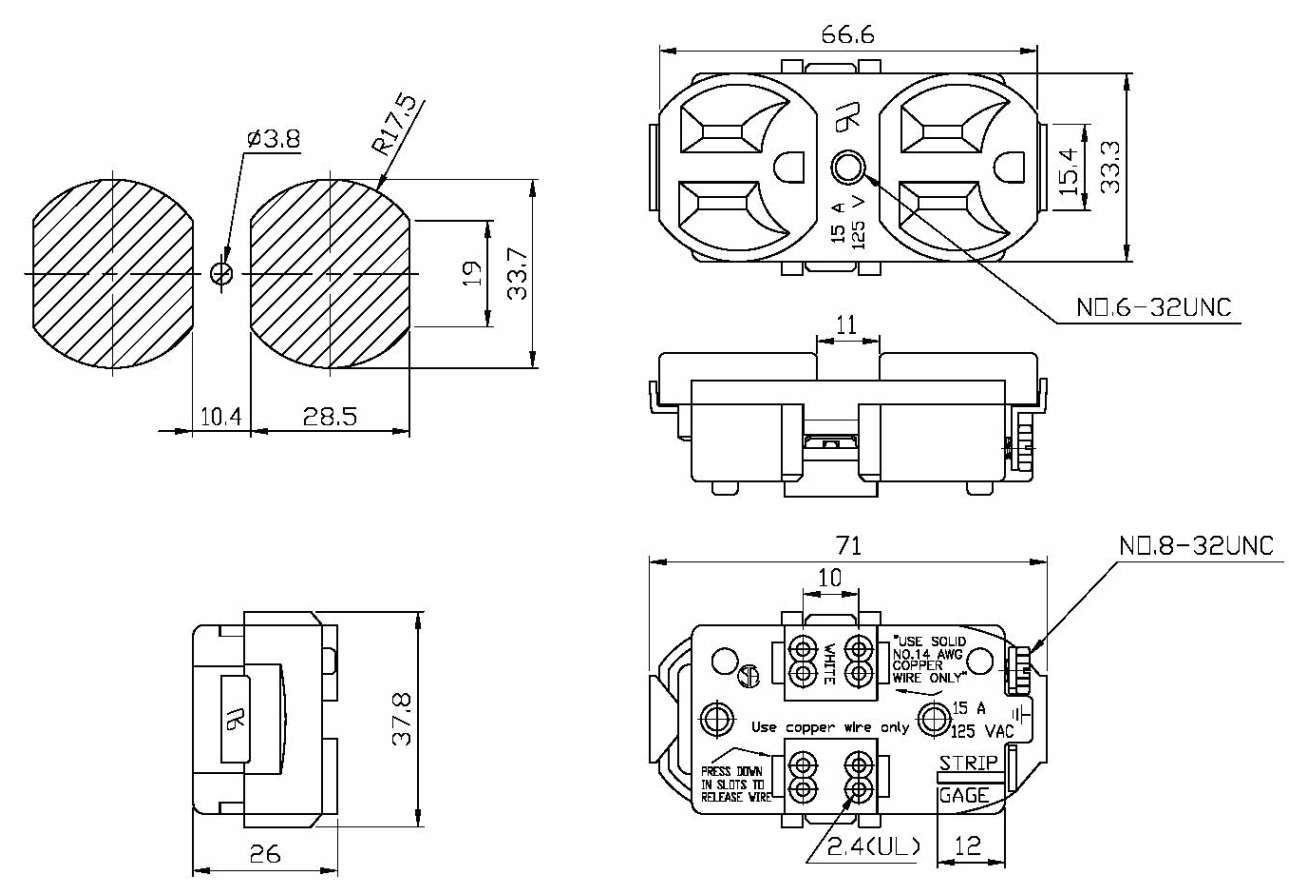


**Megatone Electronics Corp.**
Tel: +886-2-2951-0821 / Fax: +886-2-2593-1849
Email: orders@MegatoneCorp.com / mega.powe@msa.hinet.net