SO-E-06-B4

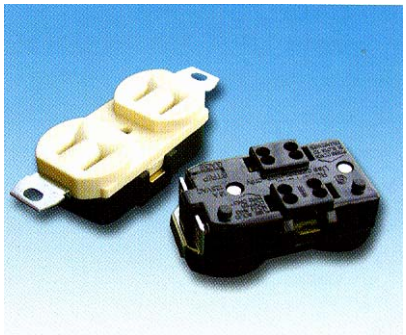

Standard: UL498 5-15R
Rating: 15A 125V AC
Approvals: UL / CSA

Dimensions:

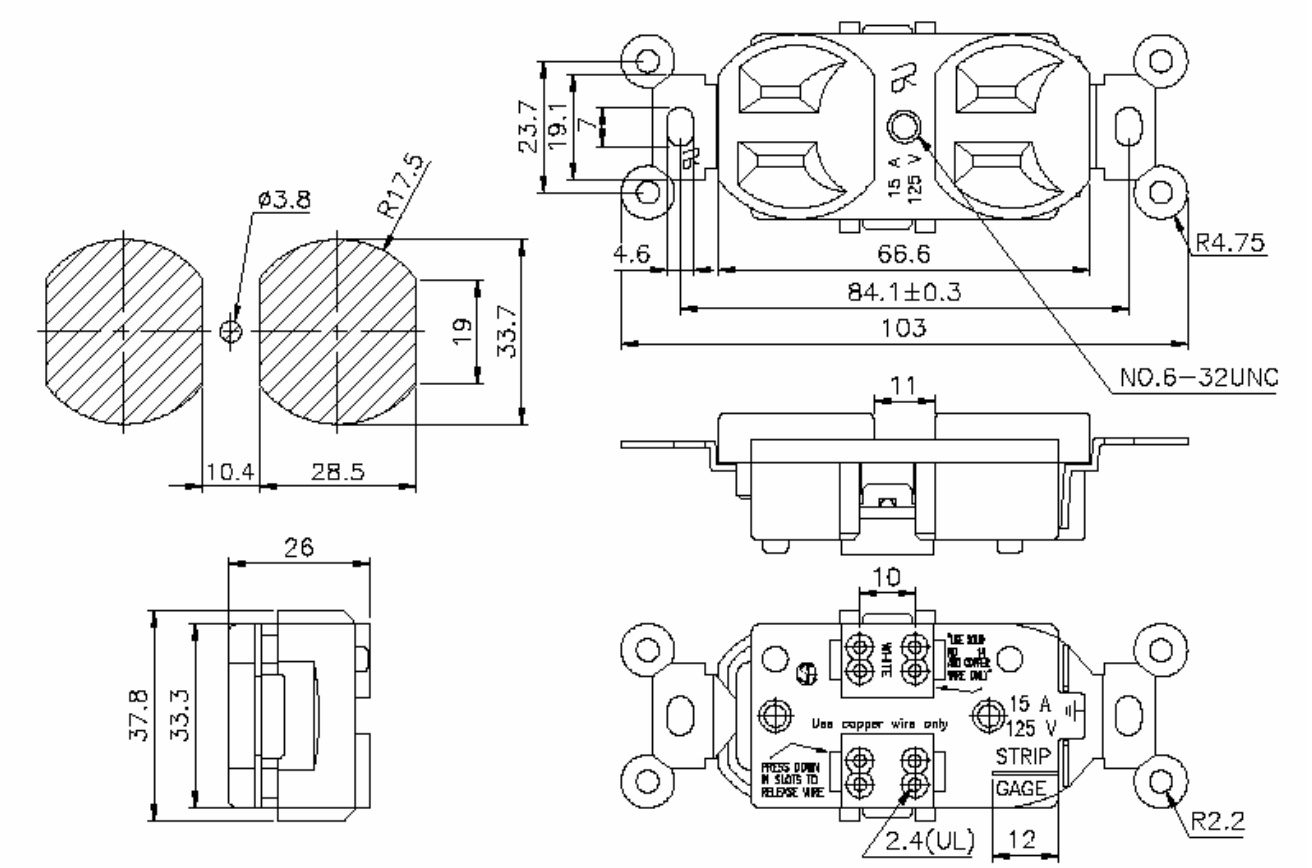

Megatone Electronics Corp.
Tel: +886-2-2951-0821 / Fax: +886-2-2593-1849
Email: orders@MegatoneCorp.com / mega.powe@msa.hinet.net